Installation

DeLaval VMS™ milking system V300

1 Calibrating the milk meters MM27

1.1 Calibration procedure overview

Calibrating the milk meters MM27 ensures that they measure accurately and that the registered milk yields correspond to actual milk yields.

The calibration procedure involves manually collecting and weighing milk, calculating correction values, and entering these values as milk meter parameters:

1. A number of cows are milked. The milk is collected and weighed for each cow.
2. A program compares the weighed amount of milk and the yield reported by the milk meters, and calculates a new scale factor and an offset.
3. The scale factor and the offset are entered as milk meter parameters, to compensate for inaccuracies in their measurements.

Note! *All four milk meters are calibrated simultaneously. The average value of the scale factor and the offset is assigned to each of the four milk meters.*

1.2 Requirements for an accurate calibration

The more cows are milked, the higher the accuracy. At least *eight* cows must be milked.

To maximise the accuracy, it is advised to milk animals with a large variation in total milk yield. (The volume of the milk bucket must be large enough for high-yield cows.)

Scales with a minimum accuracy of ±20 grams are required to weigh the milk.

To simplify the measurement, it is recommended to use a scale with "Tare" function.

Note! *During the calibration procedure, do not milk cows with milk to be diverted (such as cows under medical treatment). Otherwise, the procedure is interrupted with a system cleaning cycle.*

The milk destination settings are valid also during the calibration procedure. ("Divert milk" is diverted according to cow settings.)

Note! *For reporting and follow up, it is important to follow local and national regulations.*

1.3 Annual verification of the correct calibration

The correct calibration of the milk meters should be verified every twelve months, to discover potential drifting of internal parameters and external factors. Refer to *"ID 272: Verifying the accuracy of the milk meters MM27"* in chapter *"Preventive maintenance"* on MEMO+.

1.4 Installing the calibration valve group

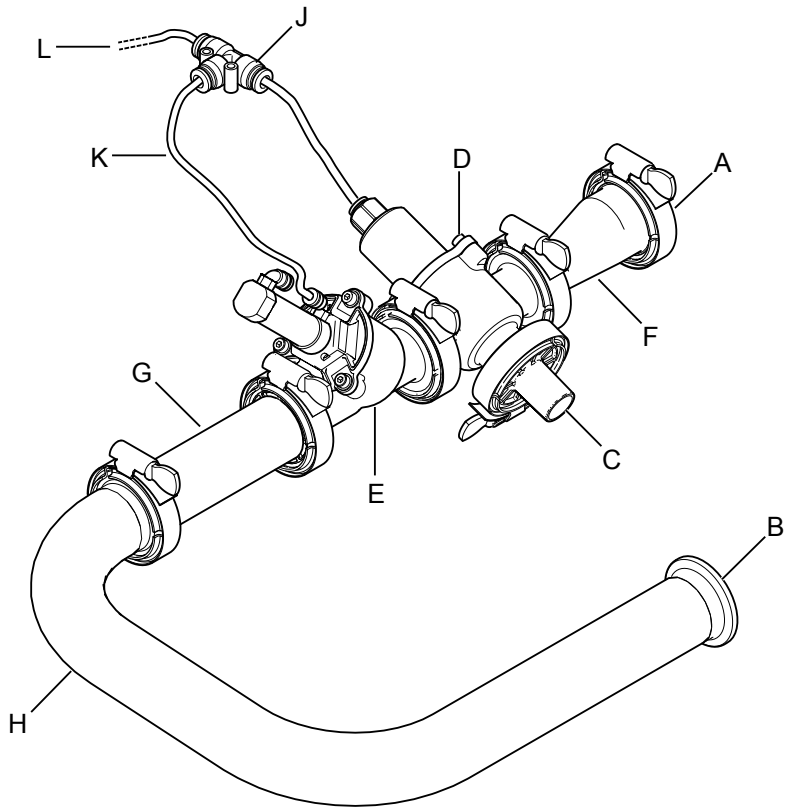

Fig. 1: Assembled parts of the calibration valve kit.

A: Receiver outlet connection
B: Milk pump connection
C: Connection (Ø20 mm) for tube to milk bucket
H: U-shaped pipe (between receiver outlet and milk pump)

The calibration valve kit (2150003255) must be ordered separately. Included parts:

- Normally open (NO) three-way valve (D)
- Normally closed (NC) two-way valve (E)
- Reducer, eccentric (F)
- Gaskets
- Pipe clamps
- Tube, 100 mm (G)
- 2 nipples, Ø25 mm
- Pneumatic tube (K, L)
- T-coupling (J)
- Pinch valve
- Plug (artificial teat)

Other required parts (not included in the kit):

- Plastic bucket, 30 litres (94544580)
- Bucket lid, 2 inlets (92842780)

- Milk tube (approximately 5 metres required) (90842302)

Preparing the milking station

1. On the GUI, switch to *"Manual (Closed stall)"* mode.
   ⇨ Wait for the milking to finish.
2. Go to the *"Cleaning"* tab and tap *"Program"*.
3. Select *"Local Rinse"* and tap *"Start"*.
   ⇨ A local rinse cycle starts.

Assembling the calibration valve group

4. Connect the two valves (D) and (E) with a gasket (Ø25 mm) and a clamp. See Fig. 1.
5. Cut a 100 mm piece of tube (91724901) (G) and connect it to valve (E) with two nipples (Ø25 mm).
6. Connect pneumatic tubes (K) to both valves.
7. Connect both pneumatic tubes to a T-piece (J) and another, longer pneumatic tube (L).
8. In AMS Service tool, go to *"MS ➔ Calibrate MM27"*.
9. Under *"Receiver vacuum"*, click *"Off"*.
10. On the milking station, remove the U-shaped pipe (H) between the bottom of the receiver and the milk pump.
11. Remove the flexible tube from the U-shaped pipe (H).
12. Connect the short end of the pipe (H) to the 100 mm tube (G) of the calibration valve group.

Installing the calibration valve group

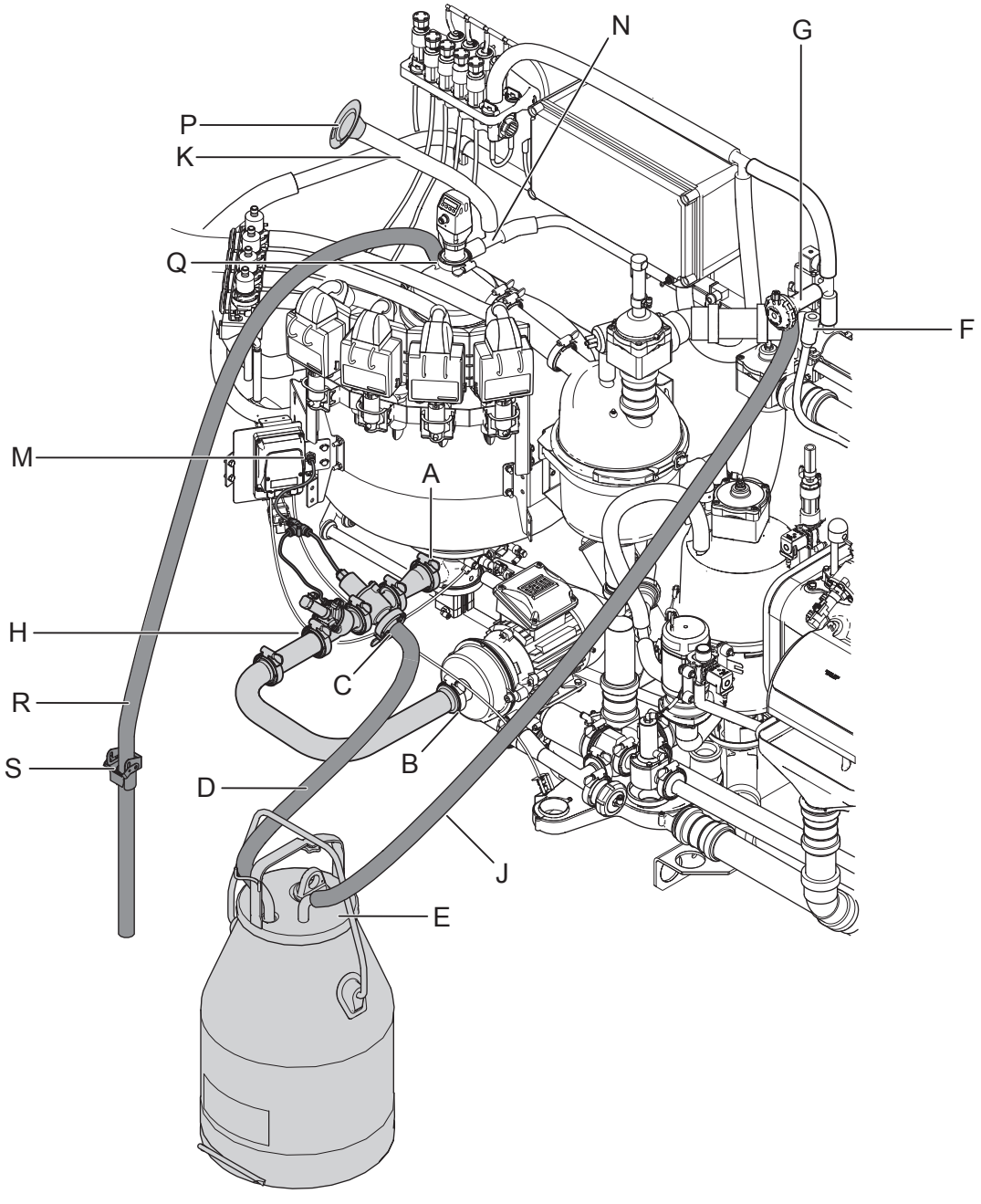

Fig. 2: The milk meter MM27 calibration setup with the calibration valve assembly (H), vacuum and milk tubes (J, R), and a milk bucket.

13. Connect the reducer end (A) of the calibration valve assembly (H) to the receiver outlet with a clamp and a gasket (Ø38 mm).

14. Connect the short end of the U-shaped pipe (B) of the calibration valve assembly to the milk pump.
15. Connect the pneumatic tube to the `A_Ori-Collector` air connection (M) next to the single sample outtake (SSO).

Connecting the milk bucket

16. Cut and connect a milk tube (D) (90842301), 1-1.5 metres long, to the outlet (C) of the normally open (NO) three-way valve.
17. Connect the other end of the tube (D) to the lid (E) of the milk bucket.
18. Disconnect the tube (F) to the inlet of the vacuum extraction valve (`A_VacuumEx-traction`) (G) in the milk module.
19. Connect a vacuum supply tube (J) (90842301), 2-2.5 metres long, between the vacuum extraction valve (G) and the milk bucket.

Connecting the milk return tube

20. Disconnect the short tube (K) between the T-connector (N) and the top of the receiver (Q) (next to the level sensor).
21. Remove the sprayer.
22. Insert a plug (P) to the open end of the short tube (K).
23. Cut and connect another milk tube (R) (90842301), 2-2.5 metres long, to the top of the receiver (Q).
24. Add a pinch valve (S) to the tube.

    Note! *Always keep the end of the tube clean. Never let it touch the floor.*

1.5 Performing the calibration procedure

In calibration mode, the milking station closes the directional valves when pumping. Instead, the milk is routed through the calibration valve group, to be collected in the milk bucket.

After the collected milk has been transferred back to the receiver, the milk pump pumps the milk to its designated destination.

Note! *Do not milk cows with milk to be diverted (such as cows under medical treatment). Otherwise, the procedure is interrupted with a system cleaning cycle.*

At least *eight* cows must be milked to get reliable results.

Preparations

1. Start PuTTY and connect to the milking station IP (e.g. `192.168.168.3`) on port `22` (SSH).
2. Log in as `vms` with the password `vms`.
3. Type `hardware 7 1` and press [Enter].
   ⇨ The current *"ScaleFactor"* and *"Offset"* settings for the milk meters are shown.
4. Verify that the parameters of each of the four milk meters are set to default values:
   - *"ScaleFactor"* = 1
   - *"Offset"* = 0
5. Verify that the software version is 7.51 or higher. If necessary, update the software.
6. If necessary, reset the parameters to their default values. See *Chapter 1.7 "Updating the milk meters with the new parameters" on page 11*.

Preparing the scales

7. Put the empty milk bucket (without the lid or any tubes) on the scales and press "Tare".
8. Alternatively, weigh the empty milk bucket (without the lid) to manually calculate the milk yield.

Enabling the calibration mode

9. In AMS Service tool, go to *"MS ➔ Calibrate MM27"*.
10. Under *"Receiver vacuum"*, click *"On"*.
11. Under *"Calibration mode"*, click *"On"*.

Milking a cow

12. On the GUI, switch to *"Auto"* mode.
    ⇨ Wait for a cow to enter the milking station and being identified.
13. Write down the cow ID.
14. Switch to *"Manual (Closed Stall)"* mode.
    ⇨ Wait for the milking to finish. The milk is automatically sucked to the milk bucket.

Weighing and returning the milk

15. Remove the plug from the lid of the milk bucket to release the vacuum.
16. Remove the lid including all tubes.

    Note! *Always keep the tubes and the inside of the milk bucket clean. Never let the lid or any tubes touch the floor.*
17. Weigh the milk bucket with the milk. Write down the result together with the cow ID.

    Note! *When not using the "Tare" function, subtract the weight of the empty milk bucket.*

Pumping the milk back to the receiver

18. Put the milk return tube into the milk bucket.
19. Open the pinch valve.
    ⇨ The milk is sucked back to the receiver.
20. When the milk bucket is empty, close the pinch valve.
21. Remove the milk return tube and empty out any milk rests from the bucket.

    Note! *Always keep the end of the tube clean. Never let it touch the floor.*
22. Put the milk bucket back onto the scales and verify that it shows zero. Otherwise, press "Tare".
23. Put back and secure the lid (with the two tubes) to the milk bucket.
24. Close the plug on the lid of the milk bucket.
25. In AMS Service tool, click *"Next"*.
    ⇨ The milk pump starts and the milk is pumped from the receiver to its designated destination.

26. Repeat this procedure from ↳ *step 12 "Milking a cow" on page 8* for a total of (at least) *eight* cows.

1.6 Calculating new scale factor and offset

1. In DelPro, go to *"Tools ➔ Reports"*.
2. Create a report showing the latest milk yields. (Filter on the milking station that is being calibrated, or manually on each cow number.)

   Note! *The milk yield must be shown in kilograms [kg].*

   Note! *The milk yield reported by the milk meters must be retrieved from DelPro. Never use the values shown on the GUI.*
3. In Windows, create a new, empty text file called `input.txt`.
4. Enter each collected value pair, separated by tab, on a new row:
   - Column 1: MM27 values (in kilograms)
   - Column 2: Scales values (in kilograms)
5. Save and close the file.
6. Download the calibration tool `CalibrateMM25.zip` from the *VMS Technical support pages*.
7. Extract the `.zip` file and start the calibration tool `CalibrateMM25.exe`.
8. In "Current settings" in the calibration tool, enter the default values:
   - *"ScaleFactor"* = 1
   - *"Offset"* = 0
9. Click *"LoadFromFile"* and open the previously created file `input.txt`.

   ⇨ The *"Statistics"* graphs and the new values for the *"ScaleFactor"* and *"Offset"* are shown in *"New settings"*.

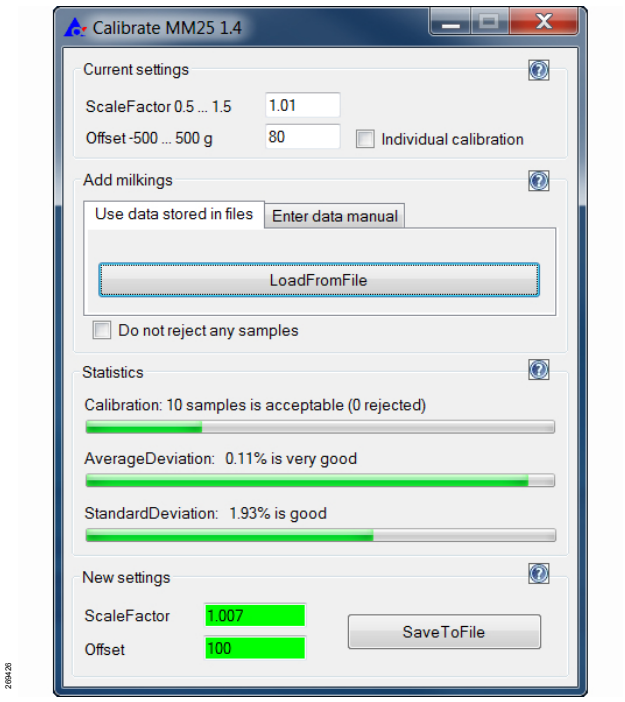

Fig. 3: The calibration tool showing the new "ScaleFactor" and "Offset" values.

1.7 Updating the milk meters with the new parameters

```
[root@MS1 config]# hardware 7 2
Which node number has the FF you would
like to work with? 101
...
Which parameter would you like to change?
1: Scale factor
2: Air messages sensitivity
3: Alcom address
4: Conductivity calibration factor with
known conductivity
5: Conductivity factor
6: Grams per pulse
7: Pulse width
8: Offset [g]
99: Exit
...
Your choice? 1
FF101 New Scale Factor ? 1.001
...
Your choice? 8
FF101 New offset [unit g] ? 13
```

(A)

(B)

(C)

2019427

Fig. 4: The menu `hardware 7 2`.

1. Start PuTTY and connect to the milking station IP (e.g. `192.168.168.3`) on port `22` (SSH).
2. Log in as `vms` with the password `vms`.
3. Type `hardware 7 2` and press [Enter].
4. Enter the node number `101` and press [Enter] to select the first milk meter.
5. Type `1`, press [Enter], and enter the `New Scale Factor`.
6. Type `8`, press [Enter], and enter the `New Offset`.
7. Type `99` and press [Enter] to exit the configuration page.
8. Repeat the procedure and enter the same values for the three remaining milk meters (with node addresses `102`, `103`, and `104`).
9. When finished, type `hardware 7 1` and press [Enter].
10. Verify that the parameters for all four milk meters have been updated.

Note! *After updating, the accuracy of the milk meter parameters must be verfied.*

1.8 Verifying the calibration according to the ICAR installation test

To meet ICAR installation test requirements, the accuracy of the new milk meter parameters must be verified.

In this process, the milk yield of *three* cows is measured and compared using the same method as above.

Note! *A calculation example follows below.*

1. Milk *three* cows in calibration mode, as described in *Chapter 1.5 "Performing the calibration procedure" on page 7*.
2. Weigh the milk and write down the values and the cow IDs.
3. In DelPro, go to *"Tools ➔ Reports*".
4. Create a report showing the latest milk yields. (Filter on the milking station that is being calibrated, or manually on each cow number.)

   Note! *The milk yield must be shown in kilograms [kg].*

   Note! *The milk yield reported by the milk meters must be retrieved from DelPro. Never use the values shown on the GUI.*
5. Calculate the deviation between the yields reported by the milk meters and the yields measured with the scales:

   5.1 Calculate the sum of all milk yields reported by the milk meters.

   5.2 Calculate the sum of all milk yields measured with the scales.

   5.3 Calculate the absolute difference (in kg) between the two sums.

   5.4 Divide the absolute difference with the yields measured by the scales.

   5.5 Multiply the result with 100.

   ⇨ The result is the deviation of the milk yield reported by the milk meters compared to the (actual) yield measured by the scales (in percent).
6. If the deviation is *below 3%*, the calibration procedure was successful and meets ICAR installation test requirements. Restore the system to normal operation. See *Chapter 1.11 "Finishing the calibration procedure" on page 15*.

7. If the deviation is *above 3%*, the calibration procedure has failed. To get more data points, additional cows must be milked. See *Chapter 1.9 "Performing an extended calibration procedure" on page 14*.

Example: Measurements from three milkings

		High yield	Medium yield	Low yield
MM27 measurement [kg]	x	25.4 kg	14.6 kg	8.9 kg
Scales measurement [kg]	y	24.7 kg	14.4 kg	9.2 kg

Example: Calculating the deviation

Calculations		Results
Sum of MM27 measurements [kg]	`sumX=x1+x2+x3`	48.9 kg
Sum of scales measurements [kg]	`sumY=y1+y2+y3`	48.3 kg
Absolute difference [kg]	`diff=ABS(sumX-sumY)`	0.6 kg
Deviation from scales measurement	`dev=diff/sumY`	0.0124
Deviation in percent	`devP=dev*100`	*1.24%*

In this example, the deviation `devP` is 1.24%. The accuracy of the milk meter calibrations meets ICAR installation test requirements.

Note! *If the calculated absolute average deviation is above 3%, additional cows must be milked in an extended calibration procedure.*

1.9 Performing an extended calibration procedure

1. Reset the parameters of each milk meter to their default values:
   - *"ScaleFactor"* = 1
   - *"Offset"* = 0

   See *Chapter 1.7 "Updating the milk meters with the new parameters" on page 11*.
2. Repeat the calibration procedure with (at least) *six* more cows. See *Chapter 1.5 "Performing the calibration procedure" on page 7*.
3. Add the measurement results to the already created text file `input.txt`.

   Note! *Add the new values to the previous ones. Do not delete any values.*
4. Repeat the calculations made with the calibration tool `CalibrateMM25.exe`. See *Chapter 1.6 "Calculating new scale factor and offset" on page 10*.

1.10 Verifying the extended calibration according to the ICAR installation test

1. Repeat the verification procedure for the ICAR installation test with *three new* cows. See *Chapter 1.8 "Verifying the calibration according to the ICAR installation test" on page 12*.
2. If the deviation is *below 3%*, the calibration procedure is successful and meets ICAR installation test requirements. Restore the system to normal operation. See *Chapter 1.11 "Finishing the calibration procedure" on page 15*.
3. If the deviation is *above 3%*, the extended calibration procedure has also failed. Repeat the verification procedure by milking *three more* cows.
4. Repeat the verification procedure for the ICAR installation test with the total of *six* cows. See *Chapter 1.8 "Verifying the calibration according to the ICAR installation test" on page 12*.
5. If the third attempt also fails, one or several of the milk meters are unacceptable. Readjustment, repair or replacement of the milk meter(s) must be performed by DeLaval, after which the entire calibration procedure must be repeated.

1.11 Finishing the calibration procedure

1. On the GUI, switch to *"Manual (Closed stall)"* mode.

Exiting the calibration mode

2. In AMS Service tool, go to *"MS ➔ Calibrate MM27"*.
3. Under *"Calibration mode"*, click *"Off"*.
4. Under *"Receiver vacuum"*, click *"Off"*.

2 Verifying the accuracy of the milk meters MM27

No	Service task	Frequency	Max. interval	Replacement parts or kits
1	ID 272: Verifying the accuracy of the milk meters MM27	-	12 months	

Frequency	-
Max. interval	12 months
Estimated time:	-
Service type:	Verify

No 1 ID 272: Verifying the accuracy of the milk meters MM27
Required tools:

- Test probe (94452701)

Part of service visit:

- Service visit 2
- Service visit 5
- Service visit 8
- Service visit 11

***Note!** Test probes are not identical. Use the same test probe to reliably compare test results over time.*

1. Switch to *"Manual (Closed Stall)"* mode.
2. Run a manual system cleaning and wait for it to finish. Alternatively, perform this task immediately after a scheduled system cleaning.

Checking the milk meter parameters and hardware

3. Start PuTTY and connect to the milking station IP (e.g. `192.168.168.3`) on port `22` (SSH).
4. Log in as `su` (super user).
5. Type `hardware 7 3` and press [Enter].
   ⇨ All parameters for the milk meters MM27 are shown.
6. Check that all values look normal and that the milk meters do not differ too much from each other.

Checking the software version

7. In AMS Service tool, go to the *"Hardware"* menu.
8. Click each of the four milk meters (node addresses `101` to `104`).
9. Verify that the software version is 7.51 or higher. If necessary, update the software.

Checking the airflow and vacuum level

10. Measure the airflow through all milk meters.
    ⇨ The air flow should be 5.0-6.5 litres/min. The value must not deviate more than 10% from the reference value.
11. Measure the vacuum level.
    ⇨ The value must not deviate more than 2.5 kPa from the reference value.
12. Write down the current values on the test form.

Note! *The wrong air flow or vacuum levels can cause a variety of problems related to animal health and performance.*

13. If the values for the airflow or the vacuum level are outside of acceptable margins:

13.1 Calibrate the cup vacuum sensors.

13.2 Inspect the passive air intakes.

13.3 Inspect the tubes from the teat cups.

13.4 Inspect the milk meter inlet gaskets.

14. Type `hardware 7 3` at the prompt and press [Enter].

⇨ All milk meters are set to technical mode.

15. Disconnect the tubes from the milk meter outlets.

16. Check that all milk meters are clean and dry.

17. If the message `Hxxx` is shown on any milk meter, the temperature of the meter is not yet stable. Wait until it disappears.

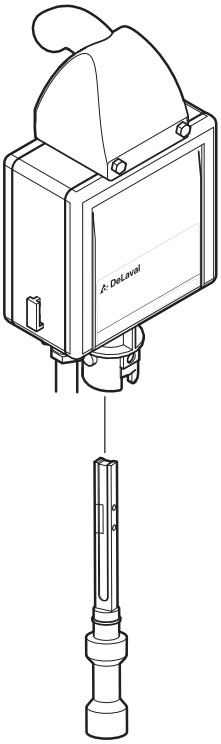

Fig. 5: Inserting the test probe into the milk meter MM27.

Testing the flow values with the test probe

18. Clean the test probe using mild detergent and water. Rinse and dry.

Note! *Even minor changes or deposits on the surface of the probe negatively affects the test result.*

19. Insert the test probe into one of the milk meters.

⇨ After a few seconds, the milk meter shows PASS and two four-digit values, minimum and maximum flow. Values normally are in the interval 3.000-4.000 kg/min.

Note! *All four milk meters must show the same values.*

20. Write down the minimum and maximum flow on the test form, under *"Current MinF"* and *"Current MaxF"*, respectively.

21. *"Ref MinF"* and *"Ref MaxF"* are the *"Current MinF"* and *"Current MaxF"* values that were generated during the start-up of the system (or after a calibration of the milk meters).

21.1 Calculate the Ratio min = Ref MinF / Current MinF.

21.2 Calculate the Ratio max = Ref MaxF / Current MaxF

22. Write down the values for *"Ratio min"* and *"Ratio max"* on the test form.

⇨ If the values lie in the interval 0.98-1.02, the milk meter is working properly.

If the values are outside of the interval, the milk meter has failed the test. Continue with *step 27 "Failed self-test" on page 19*.

23. To test the remaining milk meters, repeat the procedure from *step 18 "Testing the flow values with the test probe" on page 18*.

Stopping the procedure

24. Refit the tubes to the milk meter outlets.

25. In PuTTY, type `hardware 7 5` and press [Enter] to exit the technical mode.

26. Type `hardware 7 7` and press [Enter] to enter *"Cow low"* mode.

Failed self-test

27. If a self-test fails, dry and clean the channel of the milk meter. Be careful to prevent damages.
28. Repeat the self-test and wait for the result.
29. If the self-test fails again, remove the test probe.
30. Type `hardware 7 11` (RECAL one FF) and press [Enter].
31. If the self-test continues to fail, replace the milk meter.

Failed test with test probe

32. If the test with the test probe fails, clean and dry the channel of the milk meter. Verify that the channel is not damaged.
33. Verify that the test probe is clean, and perform another test.
34. If the values still lie outside the interval, replace the milk meter.

Periodic routine test form for VMS V300 milk meters MM27

Farm	VMS V300	Reference date	Test date

Parameter	Reference value	Current value	Difference	Max. deviation	Pass/Fail
Vacuum level:				2.5 kPa	
Milk tube length:				<10%	
Air inlet:				±10%	
Test probe serial number:					

	VMS 1				VMS 2			
Milk meter no.								
Ref. offset								
Curr. offset								
Ref. scale factor								
Curr. scale factor								
Ref. sub SW								
Curr. Sub SW								
Ref. minF								
Ref. maxF								
Curr. minF								
Curr. maxF								
Ratio min.								
Ratio max.								
Pass/Fail								

Ratio min. = Ref. minF / Curr. minF

Ratio max. = Ref. maxF / Curr. maxF

Ratio min. and Ratio max. should lie in the interval 0.98-1.02.